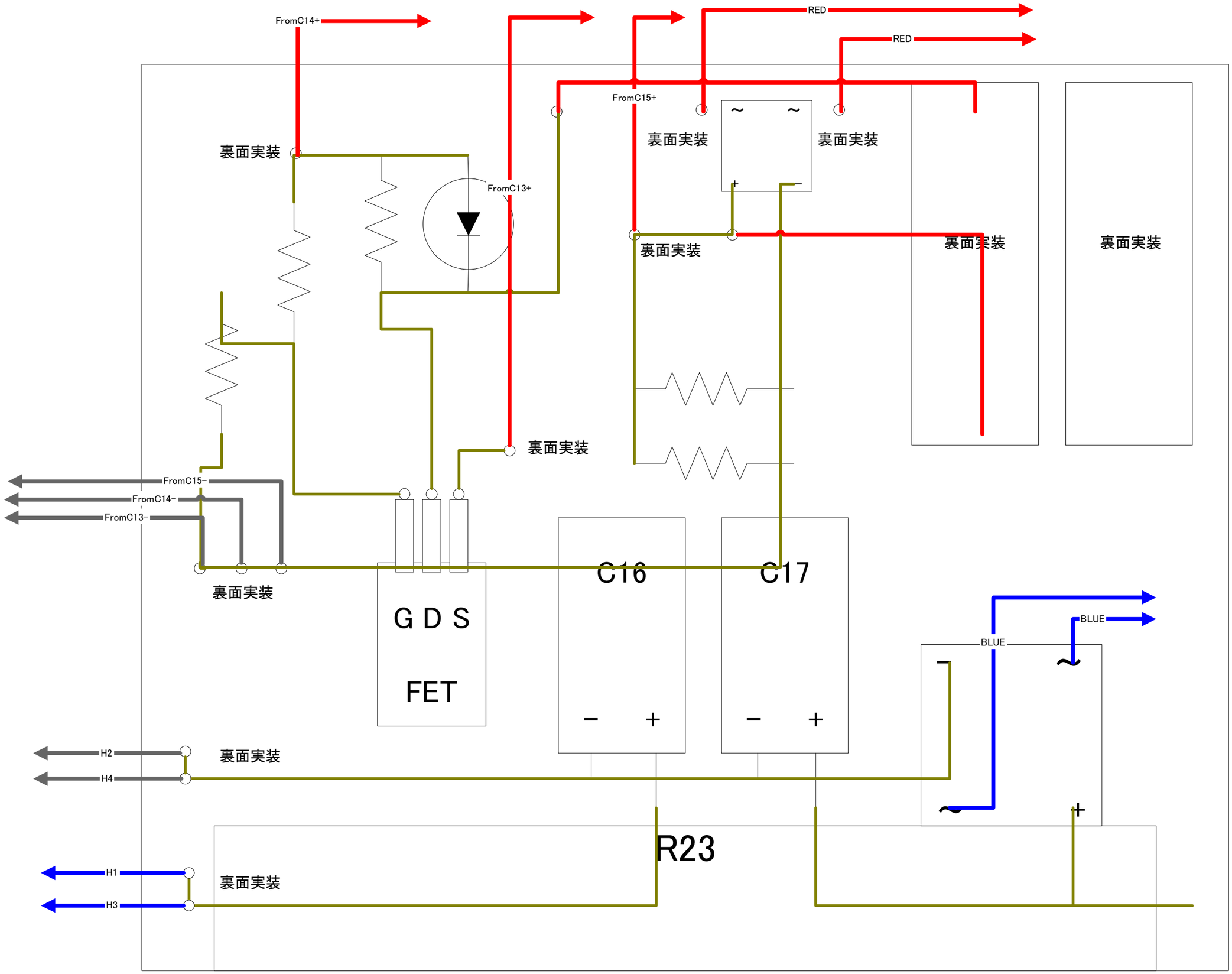
FromC14+
RED
RED
FromC15+
裏面実装
裏面実装
裏面実装
FromC13+
裏面実装
裏面実装
裏面実装
裏面実装
FromC15−
FromC14−
FromC13−
裏面実装
G D S
FET
C16
C17
BLUE
BLUE
H2
H4
裏面実装
R23
H1
H3
裏面実装